ETHICS AND SOCIAL ISSUES IN DESIGN AND ENGINEERING

THE MECHANICAL VENTILATOR

MILANO CASE

“(…) I gathered tens of researchers and medical personnel in a **non-profit collaboration** to develop the “Mechanical Ventilator Milano”, the first of its kind specifically developed for COVID-19 patients. In a very brief span, we developed a ventilator built from few pieces available in large quantities, so that it can be replicated shortly in tens of thousands of units. **The design is completely“open source”, cannone be patented**, is available on our website, and can be built anywhere by anyone with the necessary know-how.”

CRISTIANO GALBIATI

FOUNDER AND SPOKESPERSON | THE MVM COLLABORATION

VOLPI STUDIO

FOR

MVM

MILANO VENTILATORE MECCANICO

INDEX

ABOUT STUDIO VOLPI

VOLPI
STUDIO

STUDIO VOLPI IS A GLOBAL LEADING PARTNER FOR STRATEGIC PROJECTS IN THE DESIGN, ENGINEERING AND BRANDING FIELDS, WITH MORE THAN 25 YEARS OF EXPERIENCE AND OFFICES IN ITALY, CHINA AND THE US.

STUDIO VOLPI

TEAM

STUDIO VOLPI

COMPETENCES

TECHNOLOGY

[OUR BACKGROUND]

MECHATRONICS

INTERNET OF THINGS

PROTOTYPING

TESTING

MATERIALS

APPLICATIONS

CREATIVITY

[OUR DNA]

FUTURE SCENARIOS

WORKSHOPS

IDEATION AND CONCEPT

VR PROTOTYPING

DATA DRIVEN DESIGN

INNOVATION

[OUR MISSION]

FUNDED PROJECTS

VR/AR APPLICATIONS

UX TOOLBOX

POC LAB

TECHNOLOGICAL SCOUTING

EXPERIENCE

[OUR ACHIEVEMENTS]

+25 YEARS

+50 INDUSTRIES

+250 BRANDS

+500 PROJECTS

+40 AWARDS

STRATEGY

[OUR APPROACH]

SYSTEM INTEGRATION

DESIGN DRIVEN

TECHNOLOGICAL THRUST

MARKET ANALYSIS

STUDIO VOLPI

COMPETENCES

TECHNOLOGY

[OUR BACKGROUND]

MECHATRONICS

INTERNET
OF THINGS

PROTOTYPING

TESTING

MATERIALS

APPLICATIONS

STUDIO VOLPI

COMPETENCES

CREATIVITY

[OUR DNA]

FUTURE SCENARIOS

WORKSHOPS

IDEATION AND CONCEPT

VR PROTOTYPING

DATA DRIVEN DESIGN

STUDIO VOLPI

COMPETENCES

INNOVATION

[OUR MISSION]

FUNDED PROJECTS

VR/AR APPLICATIONS

UX TOOLBOX

POC LAB

TECHNOLOGICAL SCOUTING

STUDIO VOLPI

COMPETENCES

EXPERIENCE

[OUR ACHIEVEMENTS]

+25 YEARS

+50 INDUSTRIES

+250 BRANDS

+500 PROJECTS

+40 AWARDS

STUDIO VOLPI

COMPETENZE

STRATEGY

[OUR APPROACH]

SYSTEM INTEGRATION

DESIGN DRIVEN

TECHNOLOGICAL THRUST

MARKET ANALYSIS

PRODUCT EXPERIENCE

HOW TO ASSURE OPTIMAL PRODUCT EXPERIENCE?

PRODUCT EXPERIENCE

HOW TO ASSURE OPTIMAL PRODUCT EXPERIENCE?

HAPPIER, MORE EFFICIENT USERS

Well-thought usability will require less explanation, fewer barriers, and will result in happier users.

INCREASED REVENUE

Making it easier for customers to achieve their goals will mean return sales as well as better word-of-mouth recommendations.

LOWER SUPPORT COSTS

Product that has been designed intuitively needs little to no explanation, and will mean that set up and usage is easy and will require fewer bug fixes and revisions later on.

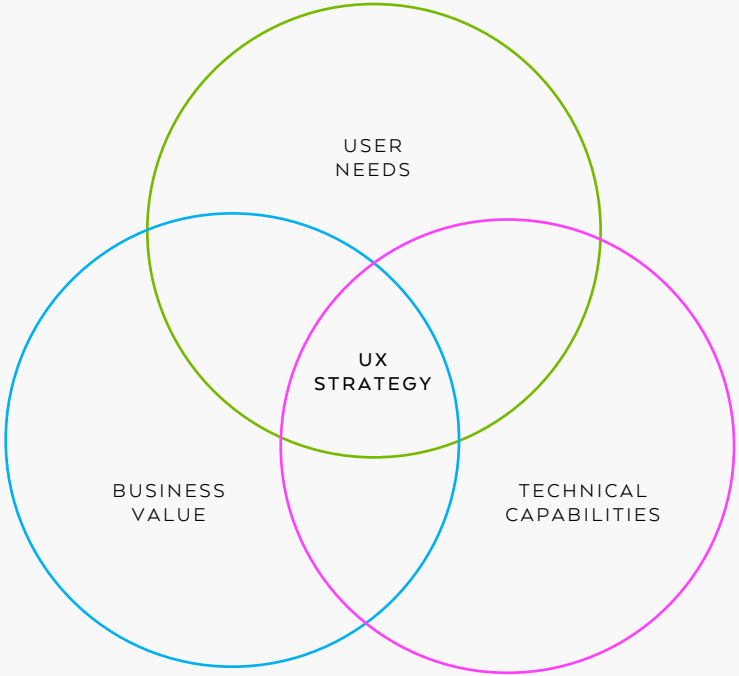

CLARIFYING VISION

Following a user-centered approach to design provides a clear vision of what to build next. You can clearly see the users' perspectives on a product: what presents difficulties, how to deal with problems, and what offers benefits.

LOWER DEVELOPMENT COSTS

Development can quickly become one of the biggest expenses. One of the key benefits of User Experience is minimizing those costs as much as possible. Being able to identify design flaws with solid data early on in development helps alleviate the risk of expensive overhauls after launch.

PRODUCT EXPERIENCE

RESEARCH

Research allow to set the basis for design phase by collecting all necessary information needed to have a clear vision on how the product should perform. This allow a good understanding what we need to design a product capable of being competitive through it's entire lifecycle.

WHAT WE WANT TO DISCOVER AT THIS POINT IS:

- What **competitors** are doing and how their product perform?
- What **product features** are needed to successfully compete with similar products on the market?
- What's happening on the market at the moment? Are there any interesting **trends to pursue** even if not from the same segment?

PRODUCT EXPERIENCE

USER RESEARCH

Observing and interacting with our users in their real life environment allow collection of good insights on their behaviour and ways of using product or system. Understanding their needs is a crucial moment for designing meaningful products.

THIS STAGE ALLOW US TO UNDERSTAND:

- What are the **basic user actions** while using product
- **What's working** and **what's not working** during that experience
- Are there any **frictions in the experience**
- **What users want** to have in order to buy or use the product
- **Understand the needs** in order to improve the overall experience

PRODUCT EXPERIENCE

USABILITY TESTING

Testing is a must during design process, as it assures best results in later stages. Making sure that design flows in right direction we're saving resources in later stages eliminating any possible friction points in product experience. Happy users are happy customers.

DURING THIS PHASE, WE ARE:

- **Designing test plan**, including user screening, protocols, recruiting, and test environment setup
- Fast black box prototyping for **environment and experience simulation**
- Executing **usability tests using different techniques** such as a/b testing or eye tracking for precise research
- Evaluation of test results in a report to **translate in improvements**

PRODUCT EXPERIENCE

DESIGN SYSTEM

Design systems are essentially collections of rules, constraints, and principles, implemented in design and code. These 3 attributes serve distinct functions and provide coherent, systemic order in systems from buttons to single screen applications.

SOME OF THE BENEFITS THAT DESIGN SYSTEM CAN PROVIDE ARE:

- Coherent visual language between different touchpoints, **assuring consistant user experience** and family feeling.
- Design, implementation and maintainance **effort reduction**

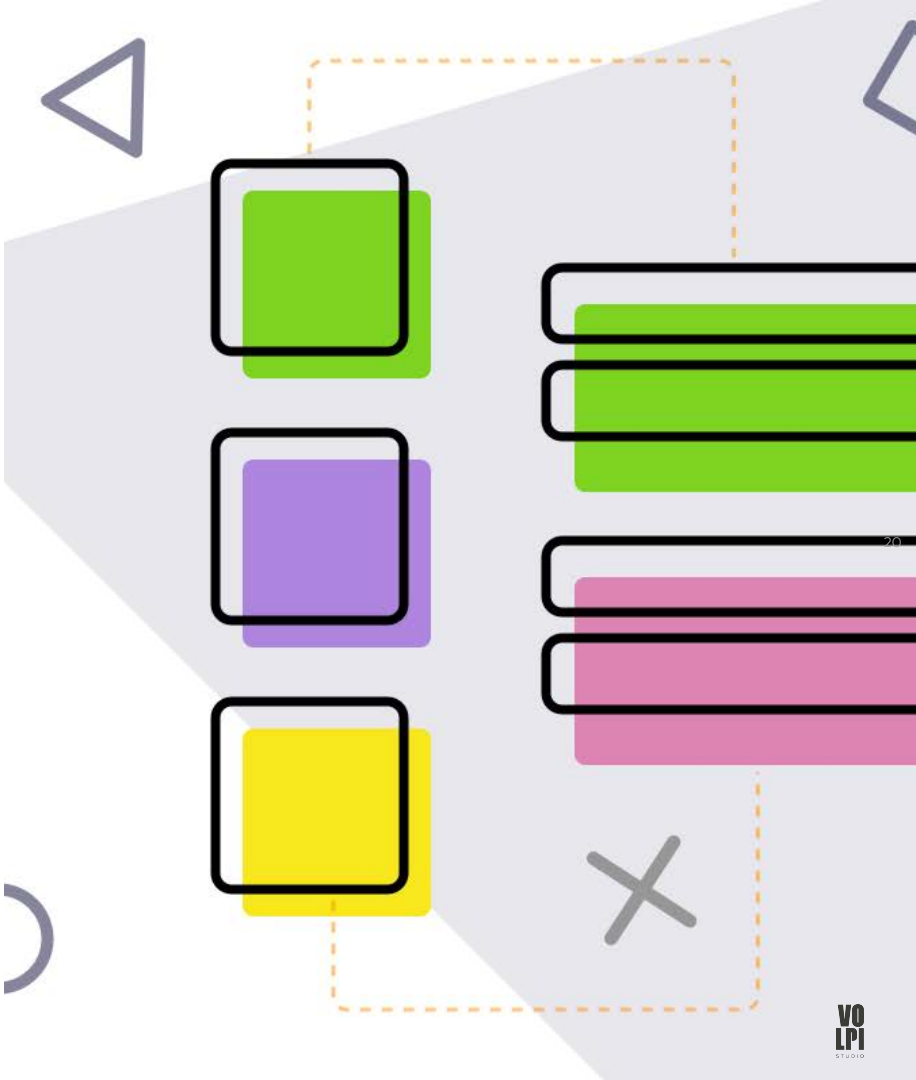

PRODUCT EXPERIENCE

ETHIC DESIGN

Design ethics concerns moral behavior and responsible choices in the practice of design. ***It guides how designers work with clients, colleagues, and the end users of products****, how they conduct the design process, how they determine the features of products, and how they assess the ethical significance or moral worth of the products that result from the activity of designing.*

In other words, ethical design is about the **"goodness" -** in terms of benefit to individuals, society, and the world - of how we collaborate, how we practice our work, and what we create. **There's never a black-and-white answer for whether design is good or bad, yet there are a number of areas for designers to focus on when considering ethics.**

CUSTOMER EXPERIENCE

CUSTOMER EXPERIENCE

DEFINE A BRAND AND MAKE IT MEMORABLE

STUDIO VOLPI

EXPERIENCE (+250 BRANDS)

STUDIO VOLPI

EXPERIENCE (+50 SECTORS)

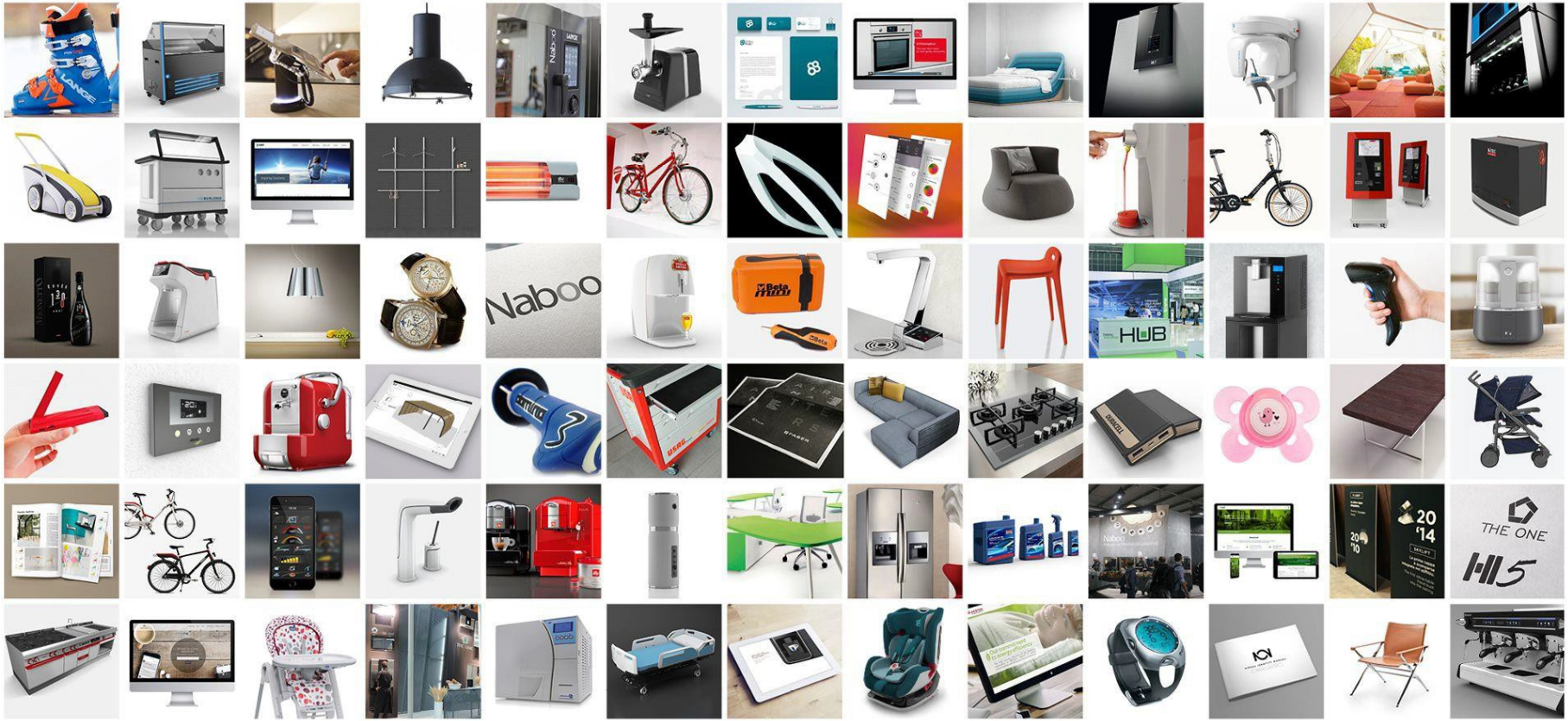

STUDIO VOLPI

AWARDS

REDDOT DESIGN AWARD

7 AWARDS

IF DESIGN AWARD

3 AWARDS

GOOD DESIGN AWARD

27 AWARDS

ADI DESIGN INDEX

3 AWARDS

STUDIO VOLPI

PARTNERS

ELECTRONIC & SOFTWARE DEVELOPMENT

PROTOTYPING

CERTIFICATIONS & LABORATORIES

INNOVATIVE SENSORS

PRODUCT INTEGRITY

THE MVM PROJECT

OBJECTIVE

NO HUMAN BEING SHOULD BE DENIED PROPER CARE BECAUSE OF A LACK OF MEDICAL DEVICES. THAT'S THE ASSUMPTION THAT ORIGINATED A UNIQUE PROJECT AIMED AT SAVING LIVES DURING THE PANDEMIC.

Ventilators on the market today are expensive machines with proprietary designs and complex controls. We need to develop a new technology, simple to deploy and use, yet safe and reliable, and especially apt to be replicated on a very large scale. This will allow us to boost the availability of mechanical ventilators, in Italy today and wherever the need will be tomorrow.

OBJECTIVE

THE AIM WAS TO DEVELOP A NEW DEVICE, CONFORMING TO THE MHRA GUIDELINES. THE "MILANO VENTILATORE MECCANICO" (MVM) **REQUIRES ONLY OXYGEN** (OR MEDICAL AIR) AND **ELECTRICITY** AND CAN BE OPERATED WITH **SIMPLE INSTRUCTIONS**.

The objective of the MVM collaboration is to design, develop, build and certify a safe ventilator that is powerful, yet gentle on the lungs. It aims to be very simple yet equipped with a sophisticated control system to offer the required ventilation modalities. The simplicity of the design, which is made possible by the MVM control system, allows for wide availability of parts, and rapid manufacturing in different countries.

AN INNOVATIVE IDEA

THE MVM INITIATIVE ORIGINATED IN THE INTERNATIONAL RESEARCH PROJECT, **THE GLOBAL ARGON DARK MATTER COLLABORATION**, THAT INCLUDES EXPERIENCE WITH GAS HANDLING SYSTEMS AND COMPLEX CONTROL SYSTEMS, THE SAME CAPABILITIES REQUIRED IN HOSPITAL VENTILATORS.

Cristiano Galbiati, the spokesperson for the GADM Collaboration, received government permission to develop a first prototype of a mechanical ventilator, the **Mechanical Ventilator Milano**, or **MVM**.

OPEN SOURCE PROJECT

PARTNERS INVOLVED

- Istituto Nazionale di Fisica Nucleare
- Nobel Art McDonald from Queen's University
- Università di Milano Statale
- Milano-Bicocca
- Federico II di Napoli
- GSSI Gran Sasso Science Institute
- Istiima e istp del CNR institutes
- Elemaster S.P.A.
- Az pneumatica s.r.l.
- Saturn Magnetic s.r.l.
- Bel Power Europe s.r.l.
- Nuclear Instruments s.r.l.
- Canadian Nuclear Laboratories (CNL)
- Triumf Institute
- Snolab
- Fermilab
- Preinceton's Physical Lab of Plasma
- More others...

ENGINEERING FEATURES

DEVELOPMENT

MODULAR DESIGN

DEVELOPMENT

GENERAL DESCRIPTION

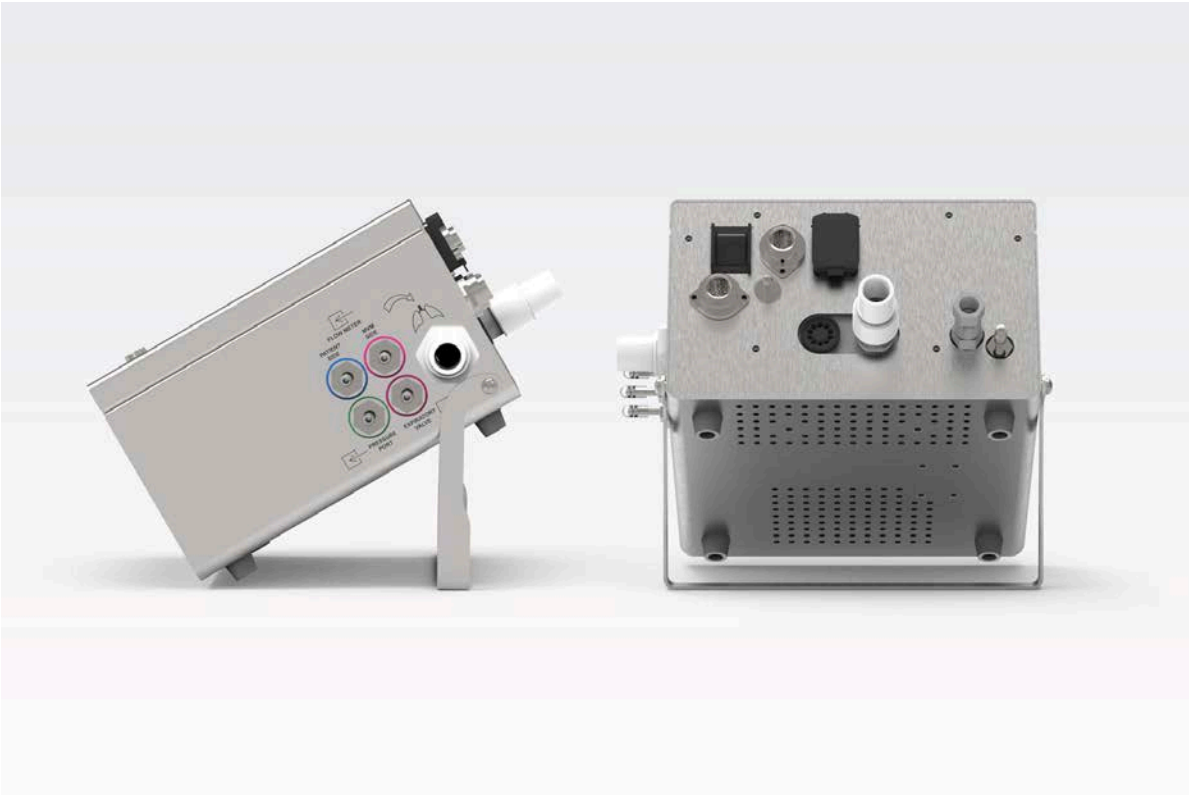

The MVM is a pressure-regulated mechanical ventilator for lungs intensive care units, **designed for COVID-19**, to work in an electronically pressure-controlled mode.

The MVM can be operated in both independent ventilation (pressure-controlled ventilation, PCV) and patient-assisted control modes (pressure-supported ventilation, PSV).

The system is directly connected to a line of pressurized medical oxygen or medical air, and relies on regulation of the flow to deliver medical air, medical oxygen, or a mixture of air and oxygen to the patient at a pressure in the range suitable for treatment.

DEVELOPMENT

KEY FEATURING

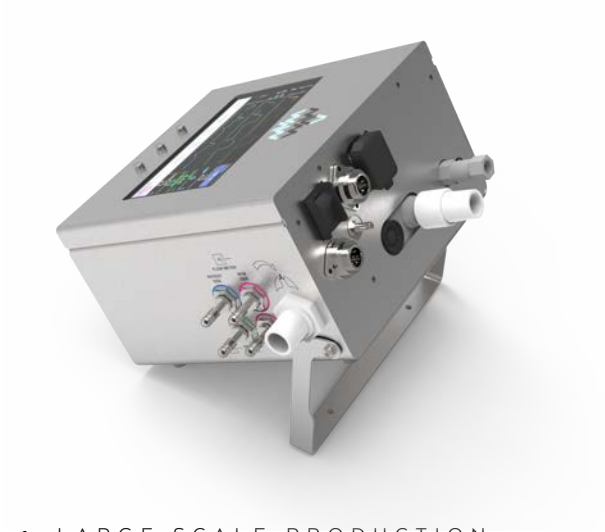

- LARGE SCALE PRODUCTION
- LIMITED COST
- SIMPLICITY OF CONSTRUCTION
- CONVENIENCE OF DEPLOYMENT
- CUSTOMIZABILITY
- LIMITED OXYGEN CONSUMPTION
- FDA EUA CERTIFICATION

DEVELOPMENT

PRESSURE REGULATION

Pressure regulation of the end-expiratory cycle is achieved by discharging the expiratory flow through a valve, which sets the desired minimum positive end-expiratory pressure (PEEP).

Another adjustable pressure limiting valve is connected to the inspiratory line and ensures that the maximum pressure delivered does not exceed the pre-set value.

DEVELOPMENT

USER INTERFACE

A front and wide 7” TFT Touch display is the User Interface for data entry and monitoring functions.

The display shows in real time process numerical and graphical data and trends, alarms and all the functional interactive information that are also stored in the equipment.

THE ROLE OF STUDIO VOLPI

AS **STUDIO VOLPI WE TOOK PART TO THE PROJECT**,

SUPPORTING OUR CLIENT **ELEMASTER GROUP**

- CERTIFIED EXPERTS IN THE DESIGN AND PRODUCTION

OF MEDICAL DEVICES -

Elemaster Group has been the coordinator since the early phases of the Ventilator development, enabling the implementation of the first prototypes.

PLANNING

TEAM COINVOLTO

SILVIA TORRETTA

Technical Leader

STUDIO VOLPI

STEFANO BINDA

Senior Engineer

STUDIO VOLPI

MASSIMO DELL'ACQUA

Key Account Manager

STUDIO VOLPI

ERMANNO SALA

Account Director

STUDIO VOLPI

PATRIZIO CIONFOLI

Design & Interaction Director

STUDIO VOLPI

STEFANO GHIONNA

Project Engineer

STUDIO VOLPI

PLANNING

TEAM COINVOLTO

PLANNING

MACRO PLANNING

GANTT

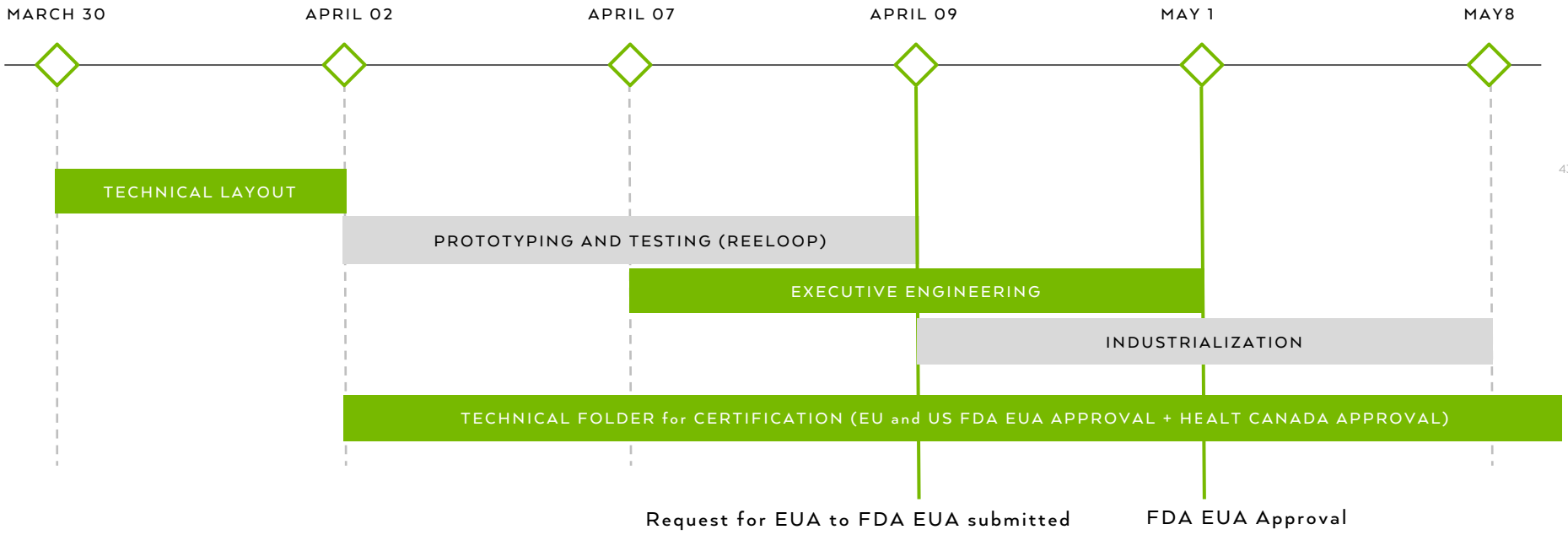

TIMING WAS A KEY FACTOR

THE PROJECT STARTED DURING THE FIRST WAVE OF INFECTIONS IN ITALY. GIANMARIO VOLPI (CEO OF STUDIO VOLPI) AUTHORIZED THE **IMMEDIATE START**, WE DIDN'T MAKE AN OFFER, AND WE DIDN'T WAIT FOR IT TO BE APPROVED. WE INTRODUCED THIS PROJECT AS A **PRIORITY** OVER ALL THE OTHERS WE WERE FOLLOWING.

"I didn't give the go ahead... I told Silvia that this project had the priority over any others. I want Studio Volpi's best resources working on it. I want this project to move forward without any obstacles. Just let me know to which clients I have to give my personal apologies if their projects have been delayed"

DEVELOPMENT

DEVELOPMENT

STARTING POINT

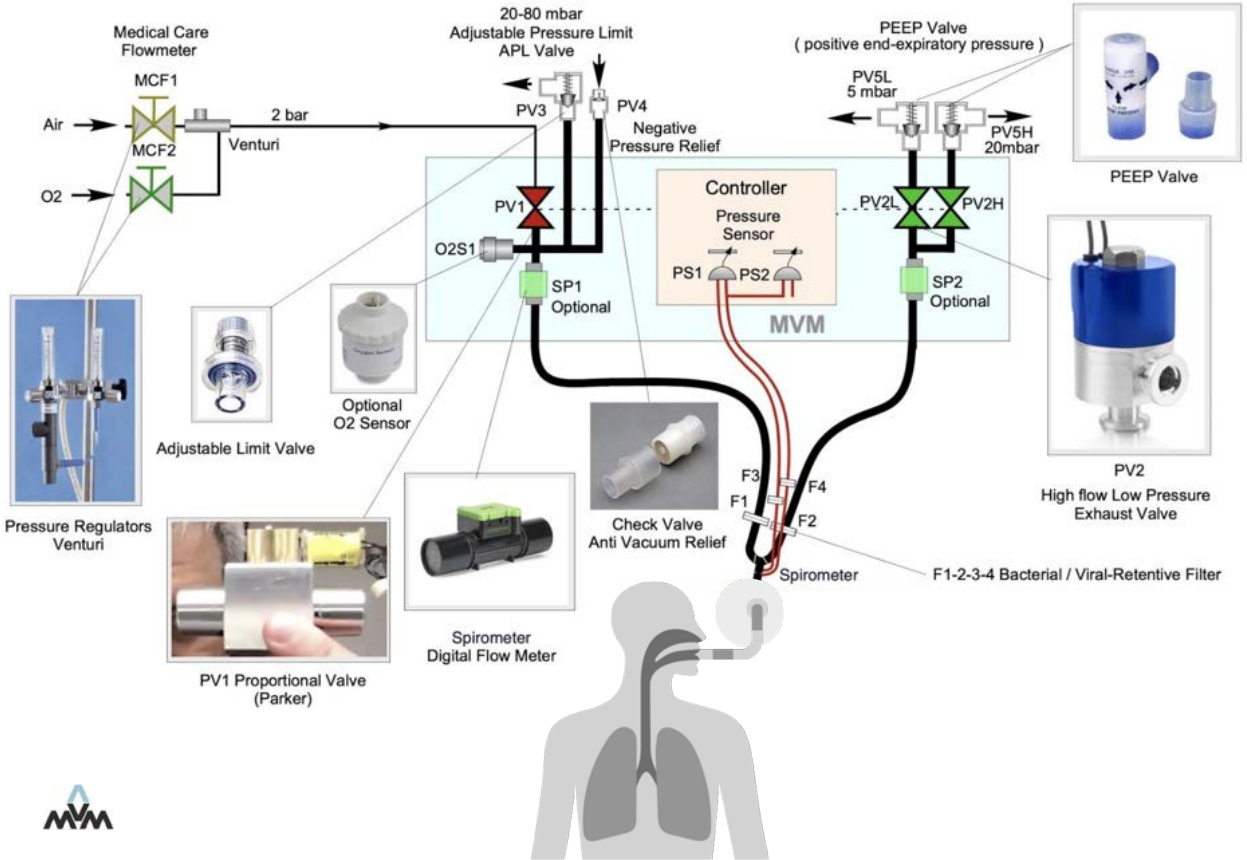

The mechanical development started from a functional scheme created on the indications of the medical team participating in the project.

The state of the art of commercially available respirators was mixed with specific requirements for the treatment of Covid-19 patients.

Our first action was to create a three-dimensional layout and to evaluate the commercial availability of the components indicated in the diagram.

DEVELOPMENT

TECHNICAL LAYOUT

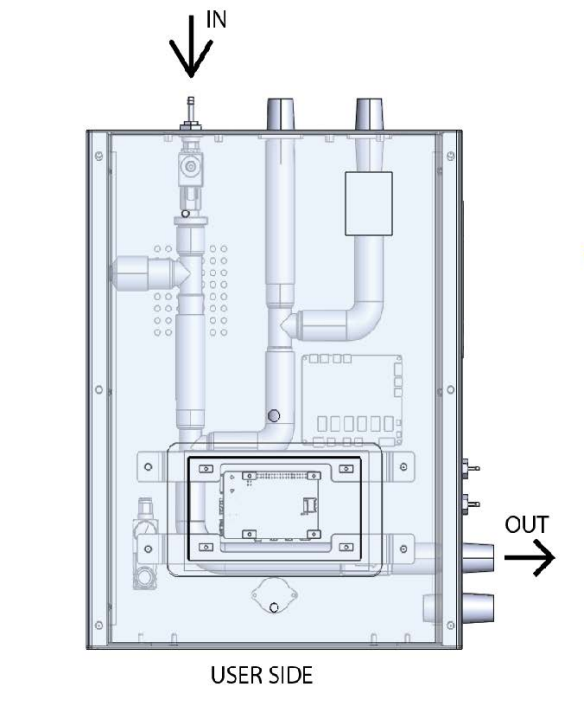

The technical layout has been modified and refined dozens of times, each new proposal developed in collaboration with:

- Fermilab (America's particle physics and accelerator Laboratory)
- Canadian Nuclear Laboratories

Was prototyped and tested with the medical team of Ospedale San Gerardo, Monza.

DEVELOPMENT

STANDARDS AND REGULATIONS

Number	Title	Note
ISO 14971	Medical devices - Application of risk management to medical devices	Risk analysis and management
EN 60601-1	Medical electrical equipment - Part 1: General requirements for basic safety and essential performance	General safety (electrical, mechanical, thermal, fault, ...)
EN 60601-1-2	Medical electrical equipment - Part 1-2: General requirements for basic safety and essential performance - Collateral standard: Electromagnetic disturbances - Requirements and tests	EMC
EN 60601-1-6	Medical electrical equipment -- Part 1-6: General requirements for basic safety and essential performance - Collateral Standard: Usability	Usability
EN 60601-1-8	Medical electrical equipment - Part 1-8: General requirements for basic safety and essential performance - Collateral Standard: General requirements, tests and guidance for alarm systems in medical electrical equipment and medical electrical systems	Alarm systems in medical electrical equipment
ISO 10993-x	Biological evaluation of medical devices	Materials biocompatibility
ISO 80601-2-12	Particular requirements for basic safety and essential performance of critical care ventilators	Ventilator: Intended to be attended by a professional operator for those patients who are dependant on mechanical ventilation. Intended for use in critical care environments in a professional healtcare facility or intended for use in transport within a professional healtcare facility.

The design was gradually refined also following the numerous reference standards that gave precise indications about it.

IP level

Robustness (steel ball test)

Sanability

Vibrations

Soundproofing

DEVELOPMENT

POC AND PROTOTYPE

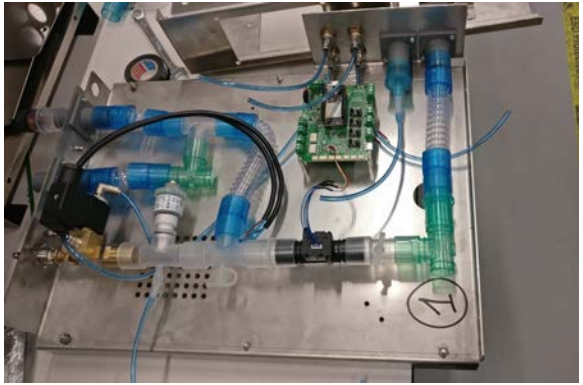

Numerous proof of concept (POC) have been carried out to validate functional and fluid dynamics aspects.

In a very short time we modified the geometries and produced with CNC or rapid prototyping the parts that were assembled and tested in less than 24 hours.

After the first POCs we have also made several complete prototypes to validate assembly tolerances, timing and related costs.

The prototypes were sent to different laboratories to perform precompliance tests on the product.

DEVELOPMENT

ELECTRONIC ELEMENTS

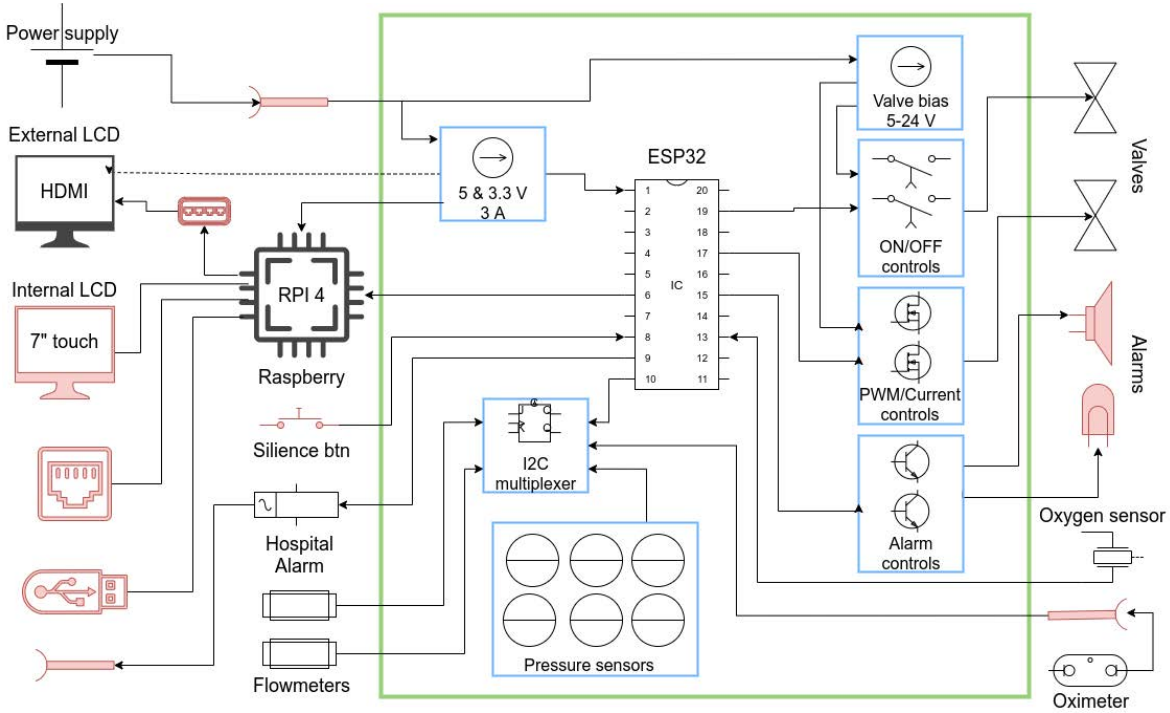

The electronic development followed the same process, several prototypes were performed that underwent various reloop and testing phases.

The software in medical instruments must also undergo specific tests that evaluate its reliability.

The mechanical designers are responsible for the integration of electronic components (correct connection of sensors, adequate ventilation, fixing systems).

DEVELOPMENT

MECHANICAL DESIGN

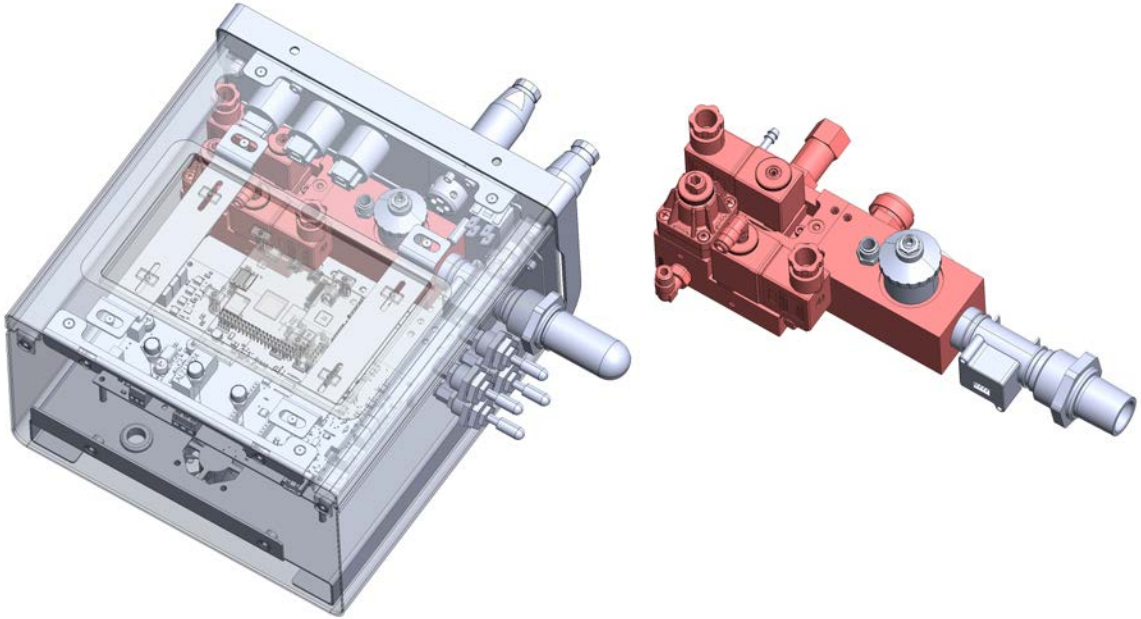

The heart of mechanical design has focused on the MANIFOLD. The central milled body that manages the flow of the system and on which all the solenoid valves and the outputs to the sensors are connected.

The development of this functional group was carried out in close contact with Camozzi Automation to **parallelize executive design and industrialization** as much as possible.

DEVELOPMENT

PRODUCT EVOLUTION

FIRST LAYOUT

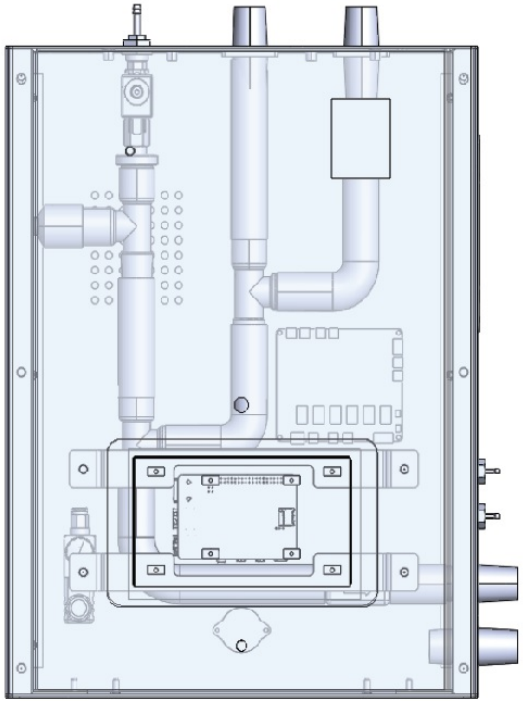

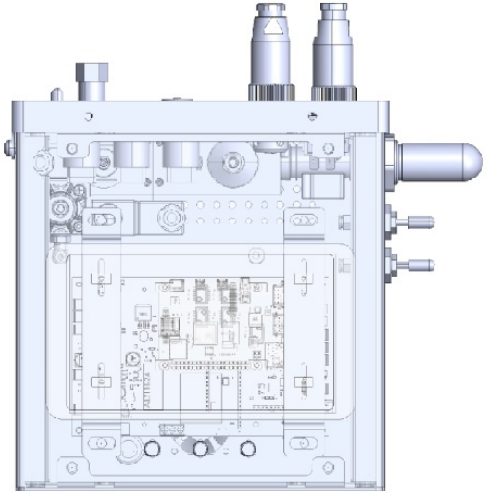

FINAL PRODUCT

The compactness of the system was a fundamental driver together with the reduction of fittings and free pipe segments, to optimize assembly times and system reliability.

DEVELOPMENT

DIFFICULTY, COSTS

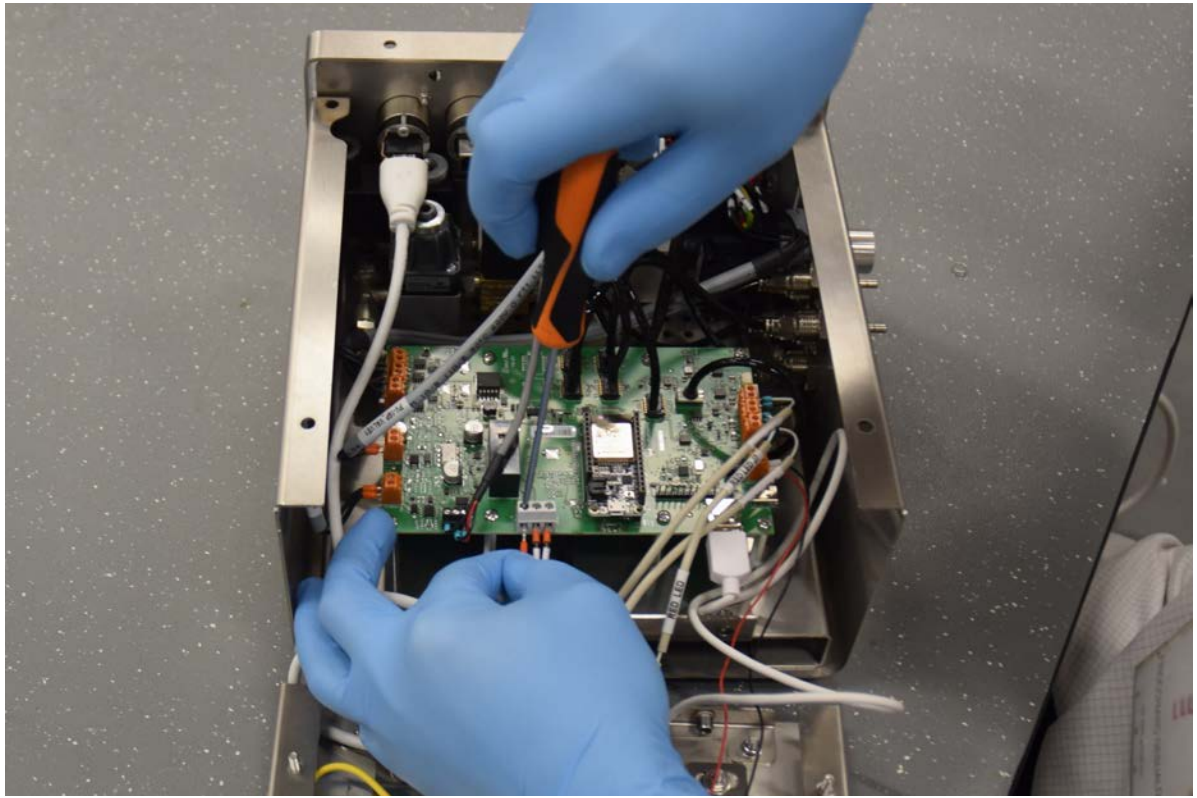

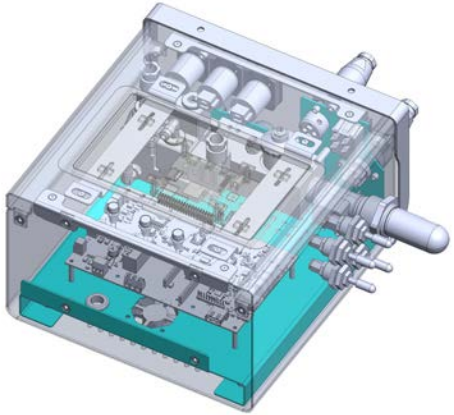

The main difficulties are connected to the following aspects:

1. The selection of components available globally
2. The choice of materials suitable for the medical sector (with overstressed supply lines)
3. The low cost budget
4. The compliance with all the requirments for certification on different markets

ETHICS AND TECHNOLOGY

ETHICS AND TECHNOLOGY

ETHICAL MISSION

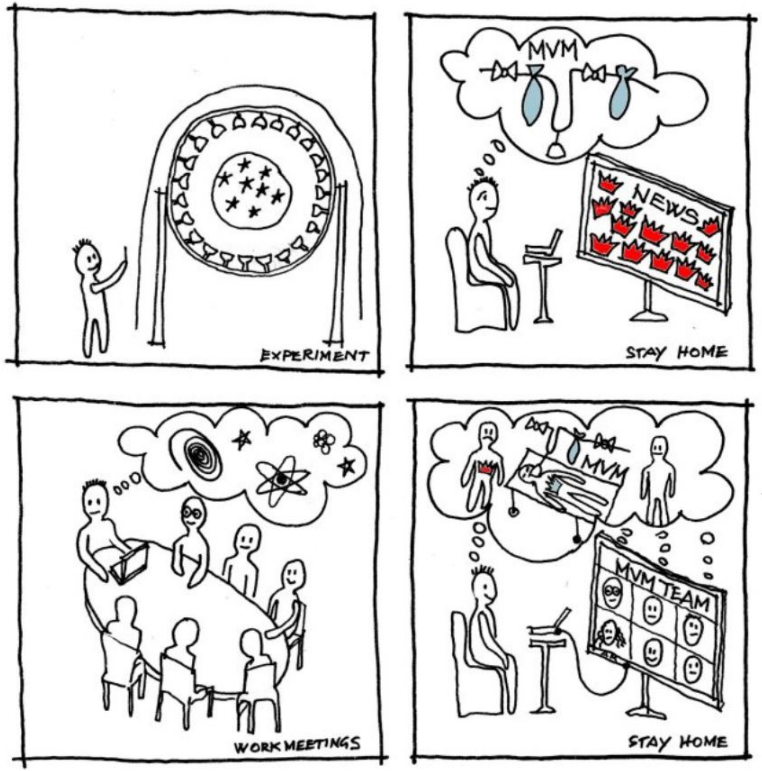

The scope of the work was to develop an **accessible mechanical ventilator**. First of all the project is completely **open source**, so that anyone around the world can take part to it and also use it to build their own ventilator.

The MVM ventilator prpoject teaches us to share knowledge. It was an experience of working on an international collaboration, sharing knowledge and breaking down cultural barriers for achieving a common goal.

ETHICS AND TECHNOLOGY

ACCESSIBLE

The **MVM Ventilator project**, furthermore, has been developed to be built with easily accessible materials and technologies so that its production can be carried out everywhere in the world with **locally sourced materials**. The product has been developed also for maximum compatibility with electricity and oxygen distribution networks, which are different depending on the geographical context.

The MVM Ventilator is not only a technically accessible solution, but it's also a **cost-effective machine**, priced less of a traditional mechanical ventilator.

ETHICS AND TECHNOLOGY

IN TIME - APPROVED

The development process of the ventilator is also unique: it was approved by the FDA EUA, the US Food and Drugs Association, in only **6 weeks**, thus becoming **immediately accessible to hospitals and medical facilities**.

TIME FOR

QUESTIONS!

THANK YOU

VOLPI STUDIO

THANK YOU

STUDIO VOLPI S.R.L.
Via G. Matteotti, 17b
21040 Carnago (VA) - Italy
S +39 0331 985144
W www.studiovolpi.com